HOZKING

2026 B2B EDITION

HOZKING PRODUCT CATALOG

DOOR PULL HANDLE COLLECTION

Stainless steel door pull manufacturing and customization for architectural projects.

PRODUCT SERIES

- 01 Ladder Pulls (H-Type)
- 02 D-Pull & C-Pull Handles (U-Type)
- 03 Offset & S-Type Pulls
- 04 Pull & Towel Bar Combos (L-Type)

SURFACE FINISHES



Mirror Polish | Satin | Matte Black | Brushed Brass | Gun Metal

Custom finishes & OEM sizing available on request.

MATERIAL GRADES	GLASS FIT	ORDER MOQ	CUSTOMIZATION
SS201 · SS304 · SS316	8–12 mm Tempered Glass Ø12/14 mm Glass Bore	100 Sets (Samples Supported)	5 Core Finishes · OEM Sizing

ZHAOQING HAOZHIJIE METAL PRODUCTS CO., LTD.

No. 24 Jinlang Road, Xiaolang Industrial Zone, Jinli Town, Gaoyao District, Zhaoqing, Guangdong, China

WEBSITE	EMAIL	WHATSAPP	WECHAT
www.hozking.com	bosco@hozking.com	+86 13229007430	+86 13229007430

HZJ-101 Ladder Pull (H-Type)

MAIN VIEW



ENGINEERING DIMENSIONS (mm)

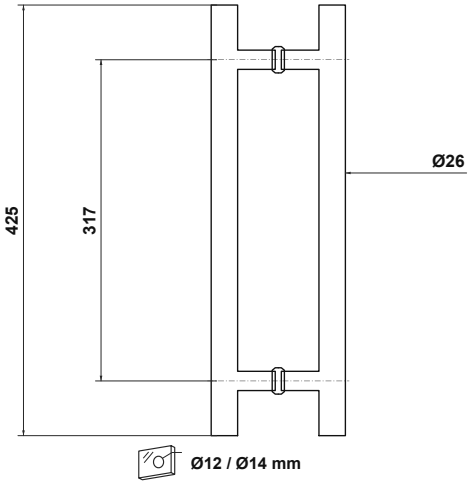

VERIFIED CATALOG SPECIFICATIONS

Material Grade	**Natural Timber Grip + SS201 / SS304 / SS316 Posts**
Overall Length	**425 mm (16.73")**
Hole Spacing (CTC)	**317 mm (12.48")**
Tube Spec	**Ø26 mm (1.02")**
Additional Sizes	**Custom lengths, CTC & tube sizes available on request.**
Minimum Order Quantity (MOQ)	**100 Sets (Sample Orders Supported)**

Glass Fit & Drilling

- **8–12 mm tempered glass** (Ø12/14 mm drill holes)
- **Thicker framed or metal doors** (optional extended bolts on request)

Confirm the bore on the approved drawing before tempering.

Available Surface Finishes

- Natural Timber Tone
- Black Walnut Tone
- Teak Tone

Custom finishes & tones available on request.

HZJ-102

D-Pull & C-Pull (U-Type)

MAIN VIEW

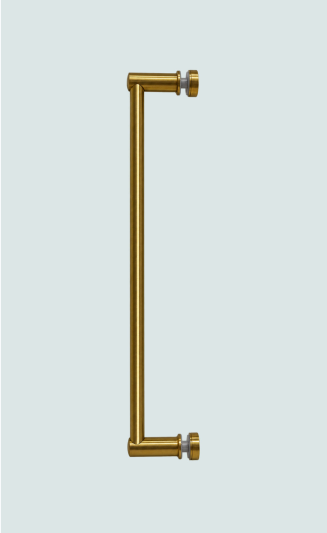

ENGINEERING DIMENSIONS (mm)

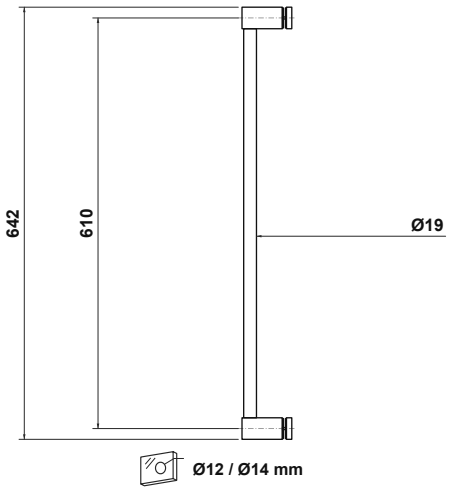

VERIFIED CATALOG SPECIFICATIONS

Material Grade	**SS201 / SS304 / SS316**
Overall Length	**642 mm (25.28")**
Hole Spacing (CTC)	**610 mm (24.02")**
Tube Spec	**Ø19 mm (0.75")**
Additional Sizes	**Custom lengths, CTC & tube sizes available on request.**
Minimum Order Quantity (MOQ)	**100 Sets (Sample Orders Supported)**

Glass Fit & Drilling

- **8–12 mm tempered glass** (Ø12/14 mm drill holes)
- **Thicker framed or metal doors** (optional extended bolts on request)

Confirm the bore on the approved drawing before tempering.

Available Surface Finishes

- Mirror Polish
- Satin
- Matte Black
- Brushed Brass
- Gun Metal

Custom finishes available on request.

HZJ-103

D-Pull & C-Pull (U-Type)

MAIN VIEW



ENGINEERING DIMENSIONS (mm)

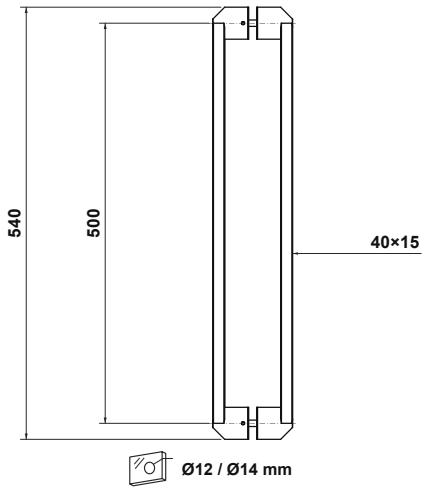

VERIFIED CATALOG SPECIFICATIONS

Material Grade	**SS201 / SS304 / SS316**
Overall Length	**540 mm (21.26")**
Hole Spacing (CTC)	**500 mm (19.69")**
Tube Spec	**40×15 mm (1.57"×0.59")**
Additional Sizes	**Custom lengths, CTC & tube sizes available on request.**
Minimum Order Quantity (MOQ)	**100 Sets (Sample Orders Supported)**

Glass Fit & Drilling

- **8–12 mm tempered glass** (Ø12/14 mm drill holes)
- **Thicker framed or metal doors** (optional extended bolts on request)

Confirm the bore on the approved drawing before tempering.

Available Surface Finishes

- Mirror Polish
- Satin
- Matte Black
- Brushed Brass
- Gun Metal

Custom finishes available on request.

HZJ-104 Shower Towel Bar Combo (L-Type)

MAIN VIEW



ENGINEERING DIMENSIONS (mm)

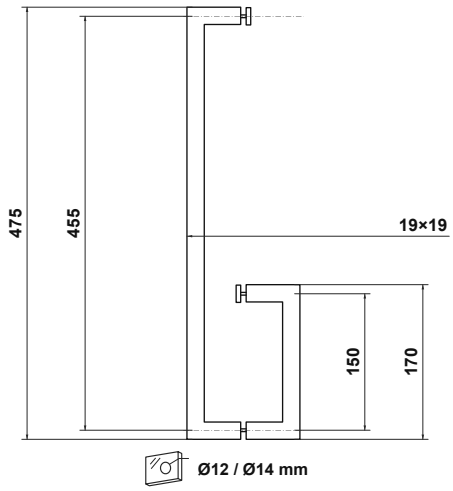

VERIFIED CATALOG SPECIFICATIONS

Material Grade	**SS201 / SS304 / SS316**
Overall Length	**Handle A: 475 / B: 170 mm (A: 18.70" / B: 6.69")**
Hole Spacing (CTC)	**Handle A: 455 / B: 150 mm (A: 17.91" / B: 5.91")**
Tube Spec	**19×19 mm (0.75"×0.75")**
Additional Sizes	**Custom lengths, CTC & tube sizes available on request.**
Minimum Order Quantity (MOQ)	**100 Sets (Sample Orders Supported)**

Glass Fit & Drilling

- **8–12 mm tempered glass** (Ø12/14 mm drill holes)
- **Thicker framed or metal doors** (optional extended bolts on request)

Confirm the bore on the approved drawing before tempering.

Available Surface Finishes

Mirror Polish · Satin · Matte Black · Brushed Brass · Gun Metal

Custom finishes available on request.

HZJ-105

D-Pull & C-Pull (U-Type)

MAIN VIEW



ENGINEERING DIMENSIONS (mm)

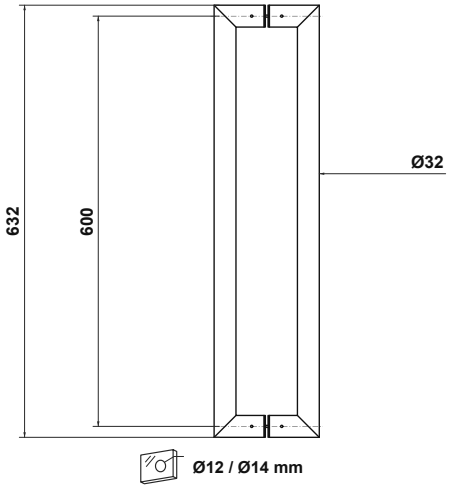

VERIFIED CATALOG SPECIFICATIONS

Material Grade	**SS201 / SS304 / SS316**
Overall Length	**632 mm (24.88")**
Hole Spacing (CTC)	**600 mm (23.62")**
Tube Spec	**Ø32 mm (1.26")**
Additional Sizes	**Custom lengths, CTC & tube sizes available on request.**
Minimum Order Quantity (MOQ)	**100 Sets (Sample Orders Supported)**

Glass Fit & Drilling

- **8–12 mm tempered glass** (Ø12/14 mm drill holes)
- **Thicker framed or metal doors** (optional extended bolts on request)

Confirm the bore on the approved drawing before tempering.

Available Surface Finishes

- Mirror Polish
- Satin
- Matte Black
- Brushed Brass
- Gun Metal

Custom finishes available on request.

HZJ-106 Ladder Pull (H-Type)

MAIN VIEW



ENGINEERING DIMENSIONS (mm)

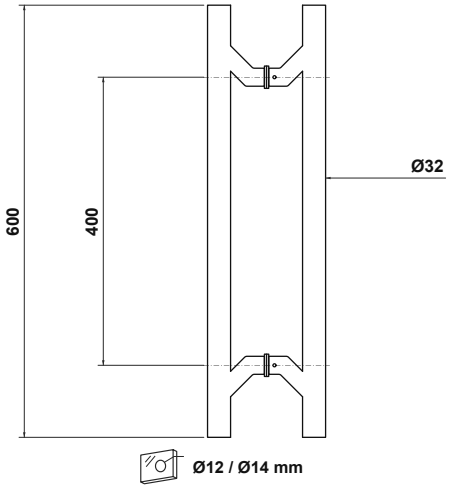

VERIFIED CATALOG SPECIFICATIONS

Material Grade	**SS201 / SS304 / SS316**
Overall Length	**600 mm (23.62")**
Hole Spacing (CTC)	**400 mm (15.75")**
Tube Spec	**Ø32 mm (1.26")**
Additional Sizes	**Custom lengths, CTC & tube sizes available on request.**
Minimum Order Quantity (MOQ)	**100 Sets (Sample Orders Supported)**

Glass Fit & Drilling

- **8–12 mm tempered glass** (Ø12/14 mm drill holes)
- **Thicker framed or metal doors** (optional extended bolts on request)

Confirm the bore on the approved drawing before tempering.

Available Surface Finishes

Mirror Polish · Satin · Matte Black · Brushed Brass · Gun Metal

Custom finishes available on request.

HZJ-107 D-Pull & C-Pull (U-Type)

MAIN VIEW



ENGINEERING DIMENSIONS (mm)

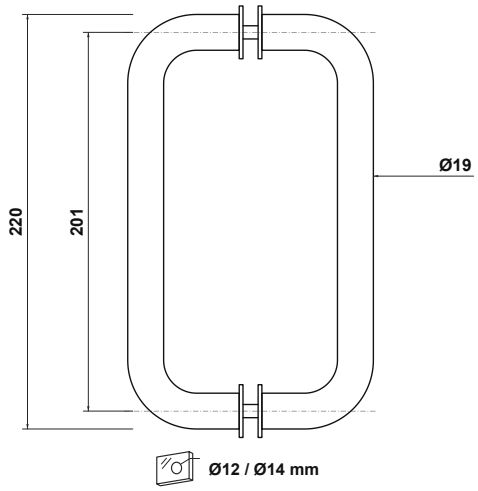

VERIFIED CATALOG SPECIFICATIONS

Material Grade	**SS201 / SS304 / SS316**
Overall Length	**220 mm (8.66")**
Hole Spacing (CTC)	**201 mm (7.91")**
Tube Spec	**Ø19 mm (0.75")**
Additional Sizes	**Custom lengths, CTC & tube sizes available on request.**
Minimum Order Quantity (MOQ)	**100 Sets (Sample Orders Supported)**

Glass Fit & Drilling

- **8–12 mm tempered glass** (Ø12/14 mm drill holes)
- **Thicker framed or metal doors** (optional extended bolts on request)

Confirm the bore on the approved drawing before tempering.

Available Surface Finishes

- Mirror Polish
- Satin
- Matte Black
- Brushed Brass
- Gun Metal

Custom finishes available on request.

HZJ-108 D-Pull & C-Pull (U-Type)

MAIN VIEW

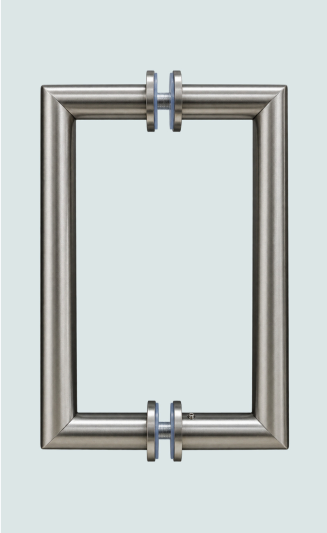

ENGINEERING DIMENSIONS (mm)

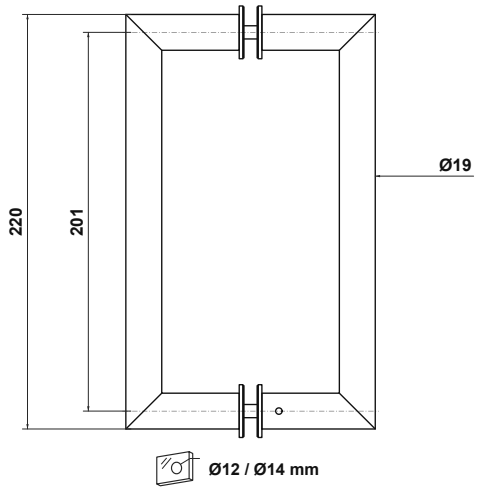

VERIFIED CATALOG SPECIFICATIONS

Material Grade	**SS201 / SS304 / SS316**
Overall Length	**220 mm (8.66")**
Hole Spacing (CTC)	**201 mm (7.91")**
Tube Spec	**Ø19 mm (0.75")**
Additional Sizes	**Custom lengths, CTC & tube sizes available on request.**
Minimum Order Quantity (MOQ)	**100 Sets (Sample Orders Supported)**

Glass Fit & Drilling

- **8–12 mm tempered glass** (Ø12/14 mm drill holes)
- **Thicker framed or metal doors** (optional extended bolts on request)

Confirm the bore on the approved drawing before tempering.

Available Surface Finishes

- Mirror Polish
- Satin
- Matte Black
- Brushed Brass
- Gun Metal

Custom finishes available on request.

HZJ-109 Ladder Pull (H-Type)

MAIN VIEW

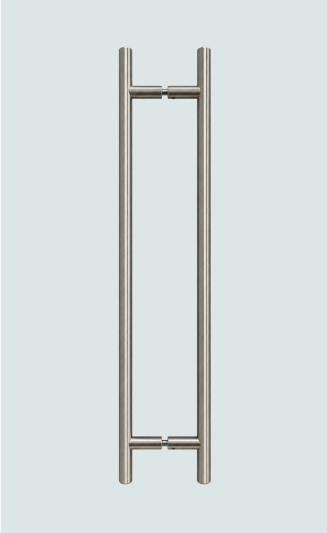

ENGINEERING DIMENSIONS (mm)

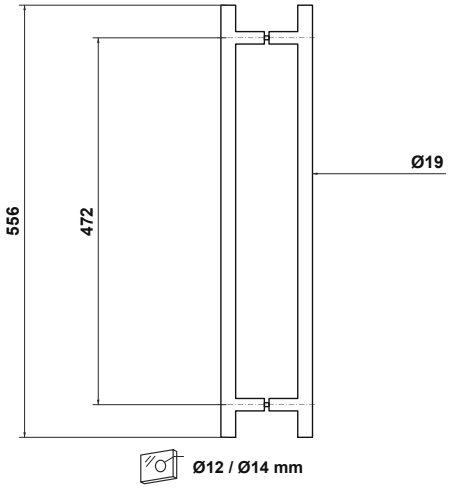

VERIFIED CATALOG SPECIFICATIONS

Material Grade	**SS201 / SS304 / SS316**
Overall Length	**556 mm (21.89")**
Hole Spacing (CTC)	**472 mm (18.58")**
Tube Spec	**Ø19 mm (0.75")**
Additional Sizes	**Custom lengths, CTC & tube sizes available on request.**
Minimum Order Quantity (MOQ)	**100 Sets (Sample Orders Supported)**

Glass Fit & Drilling

- **8–12 mm tempered glass** (Ø12/14 mm drill holes)
- **Thicker framed or metal doors** (optional extended bolts on request)

Confirm the bore on the approved drawing before tempering.

Available Surface Finishes

- Mirror Polish
- Satin
- Matte Black
- Brushed Brass
- Gun Metal

Custom finishes available on request.

HZJ-110 Ladder Pull (H-Type)

MAIN VIEW



ENGINEERING DIMENSIONS (mm)

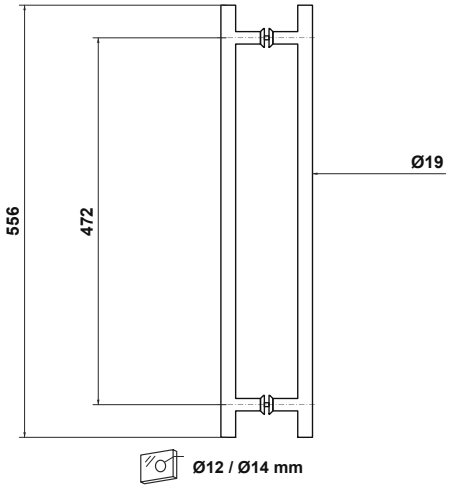

VERIFIED CATALOG SPECIFICATIONS

Material Grade	**SS201 / SS304 / SS316**
Overall Length	**556 mm (21.89")**
Hole Spacing (CTC)	**472 mm (18.58")**
Tube Spec	**Ø19 mm (0.75")**
Additional Sizes	**Custom lengths, CTC & tube sizes available on request.**
Minimum Order Quantity (MOQ)	**100 Sets (Sample Orders Supported)**

Glass Fit & Drilling

- **8–12 mm tempered glass** (Ø12/14 mm drill holes)
- **Thicker framed or metal doors** (optional extended bolts on request)

Confirm the bore on the approved drawing before tempering.

Available Surface Finishes

Mirror Polish · Satin · Matte Black · Brushed Brass · Gun Metal

Custom finishes available on request.

HZJ-111 D-Pull & C-Pull (U-Type)

MAIN VIEW



ENGINEERING DIMENSIONS (mm)

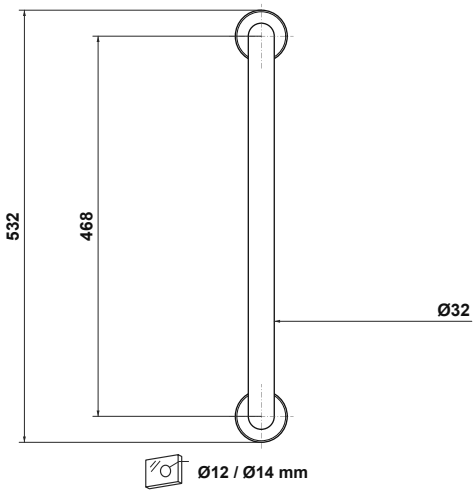

VERIFIED CATALOG SPECIFICATIONS

Material Grade	**SS201 / SS304 / SS316**
Overall Length	**532 mm (20.94")**
Hole Spacing (CTC)	**468 mm (18.43")**
Tube Spec	**Ø32 mm (1.26")**
Additional Sizes	**Custom lengths, CTC & tube sizes available on request.**
Minimum Order Quantity (MOQ)	**100 Sets (Sample Orders Supported)**

Glass Fit & Drilling

- **8–12 mm tempered glass** (Ø12/14 mm drill holes)
- **Thicker framed or metal doors** (optional extended bolts on request)

Confirm the bore on the approved drawing before tempering.

Available Surface Finishes

Mirror Polish · Satin · Matte Black · Brushed Brass · Gun Metal

Custom finishes available on request.

HZJ-112 D-Pull & C-Pull (U-Type)

MAIN VIEW

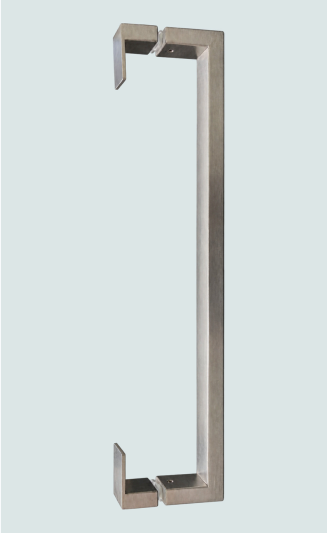

ENGINEERING DIMENSIONS (mm)

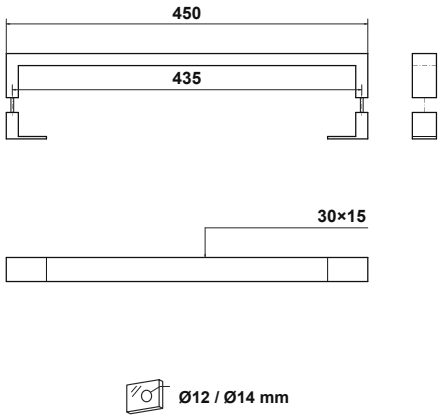

VERIFIED CATALOG SPECIFICATIONS

Material Grade	**SS201 / SS304 / SS316**
Overall Length	**450 mm (17.72")**
Hole Spacing (CTC)	**435 mm (17.13")**
Tube Spec	**30×15 mm (1.18"×0.59")**
Additional Sizes	**Custom lengths, CTC & tube sizes available on request.**
Minimum Order Quantity (MOQ)	**100 Sets (Sample Orders Supported)**

Glass Fit & Drilling

- **8–12 mm tempered glass** (Ø12/14 mm drill holes)
- **Thicker framed or metal doors** (optional extended bolts on request)

Confirm the bore on the approved drawing before tempering.

Available Surface Finishes

Mirror Polish · Satin · Matte Black · Brushed Brass · Gun Metal

Custom finishes available on request.

HZJ-113 D-Pull & C-Pull (U-Type)

MAIN VIEW

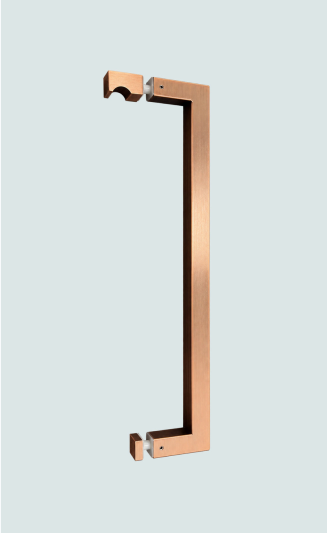

ENGINEERING DIMENSIONS (mm)

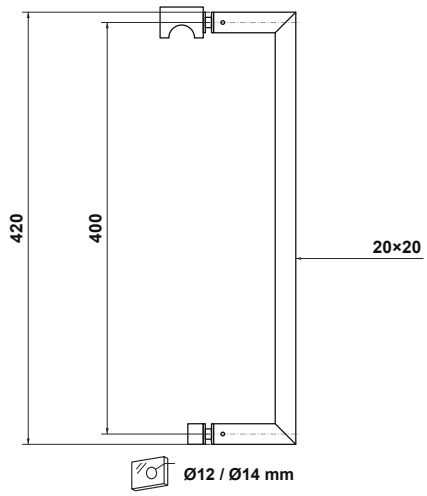

VERIFIED CATALOG SPECIFICATIONS

Material Grade	**SS201 / SS304 / SS316**
Overall Length	**420 mm (16.54")**
Hole Spacing (CTC)	**400 mm (15.75")**
Tube Spec	**20×20 mm (0.79"×0.79")**
Additional Sizes	**Custom lengths, CTC & tube sizes available on request.**
Minimum Order Quantity (MOQ)	**100 Sets (Sample Orders Supported)**

Glass Fit & Drilling

- **8–12 mm tempered glass** (Ø12/14 mm drill holes)
- **Thicker framed or metal doors** (optional extended bolts on request)

Confirm the bore on the approved drawing before tempering.

Available Surface Finishes

- Mirror Polish
- Satin
- Matte Black
- Brushed Brass
- Gun Metal

Custom finishes available on request.

HZJ-114 D-Pull & C-Pull (U-Type)

MAIN VIEW

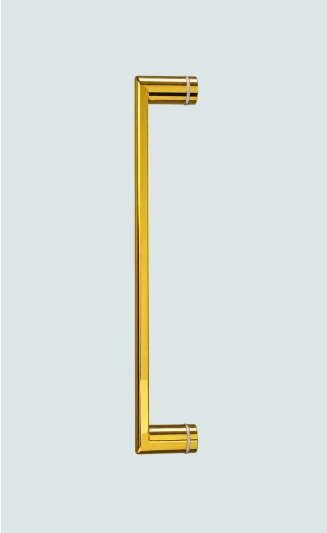

ENGINEERING DIMENSIONS (mm)

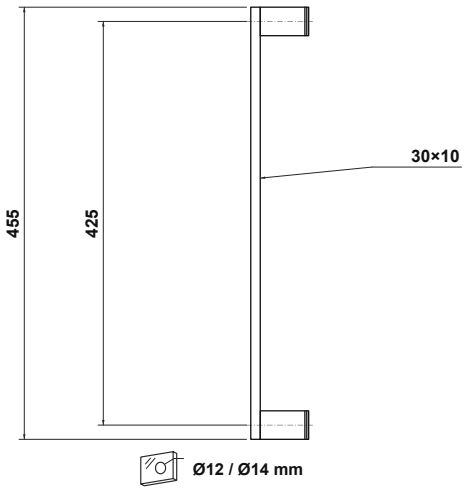

VERIFIED CATALOG SPECIFICATIONS

Material Grade	**SS201 / SS304 / SS316**
Overall Length	**455 mm (17.91")**
Hole Spacing (CTC)	**425 mm (16.73")**
Tube Spec	**30×10 mm (1.18"×0.39")**
Additional Sizes	**Custom lengths, CTC & tube sizes available on request.**
Minimum Order Quantity (MOQ)	**100 Sets (Sample Orders Supported)**

Glass Fit & Drilling

- **8–12 mm tempered glass** (Ø12/14 mm drill holes)
- **Thicker framed or metal doors** (optional extended bolts on request)

Confirm the bore on the approved drawing before tempering.

Available Surface Finishes

Mirror Polish · Satin · Matte Black · Brushed Brass · Gun Metal

Custom finishes available on request.

HZJ-115 Offset & S-Type

MAIN VIEW

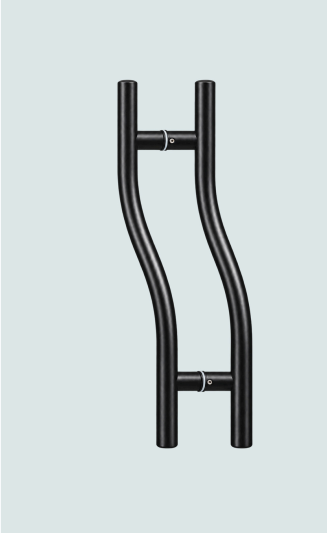

ENGINEERING DIMENSIONS (mm)

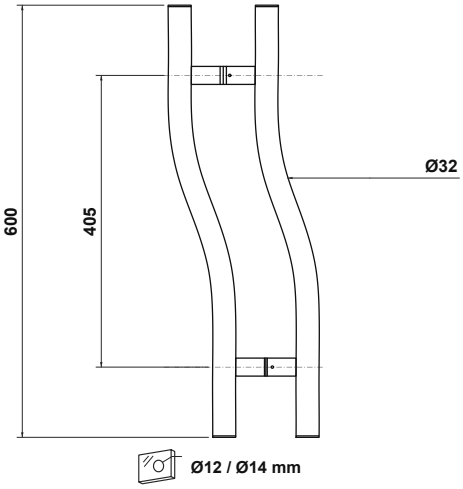

VERIFIED CATALOG SPECIFICATIONS

Material Grade	**SS201 / SS304 / SS316**
Overall Length	**600 mm (23.62")**
Hole Spacing (CTC)	**405 mm (15.94")**
Tube Spec	**Ø32 mm (1.26")**
Additional Sizes	**Custom lengths, CTC & tube sizes available on request.**
Minimum Order Quantity (MOQ)	**100 Sets (Sample Orders Supported)**

Glass Fit & Drilling

- **8–12 mm tempered glass** (Ø12/14 mm drill holes)
- **Thicker framed or metal doors** (optional extended bolts on request)

Confirm the bore on the approved drawing before tempering.

Available Surface Finishes

Mirror Polish · Satin · Matte Black · Brushed Brass · Gun Metal

Custom finishes available on request.

HZJ-116 D-Pull & C-Pull (U-Type)

MAIN VIEW

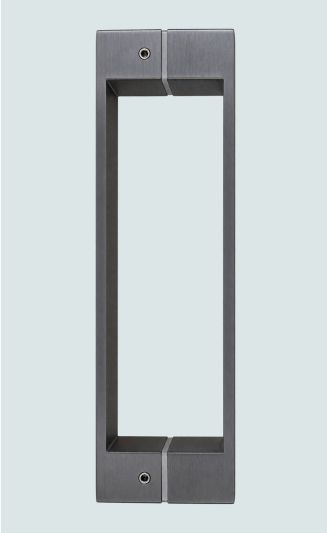

ENGINEERING DIMENSIONS (mm)

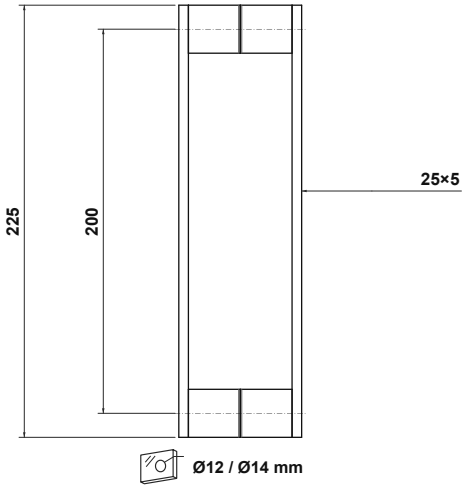

VERIFIED CATALOG SPECIFICATIONS

Material Grade	**SS201 / SS304 / SS316**
Overall Length	**225 mm (8.86")**
Hole Spacing (CTC)	**200 mm (7.87")**
Tube Spec	**25×5 mm (0.98"×0.20")**
Additional Sizes	**Custom lengths, CTC & tube sizes available on request.**
Minimum Order Quantity (MOQ)	**100 Sets (Sample Orders Supported)**

Glass Fit & Drilling

- **8–12 mm tempered glass** (Ø12/14 mm drill holes)
- **Thicker framed or metal doors** (optional extended bolts on request)

Confirm the bore on the approved drawing before tempering.

Available Surface Finishes

Mirror Polish · Satin · Matte Black · Brushed Brass · Gun Metal

Custom finishes available on request.

HZJ-117 Shower Towel Bar Combo (L-Type)

MAIN VIEW



ENGINEERING DIMENSIONS (mm)

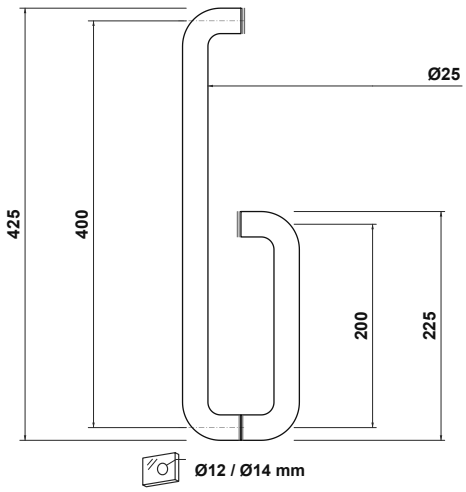

VERIFIED CATALOG SPECIFICATIONS

Material Grade	**SS201 / SS304 / SS316**
Overall Length	**Long: 425 / Short: 225 mm (Long: 16.73" / Short: 8.86")**
Hole Spacing (CTC)	**Long: 400 / Short: 200 mm (Long: 15.75" / Short: 7.87")**
Tube Spec	**Ø25 mm (0.98")**
Additional Sizes	**Custom lengths, CTC & tube sizes available on request.**
Minimum Order Quantity (MOQ)	**100 Sets (Sample Orders Supported)**

Glass Fit & Drilling

- **8–12 mm tempered glass** (Ø12/14 mm drill holes)
- **Thicker framed or metal doors** (optional extended bolts on request)

Confirm the bore on the approved drawing before tempering.

Available Surface Finishes

Mirror Polish · Satin · Matte Black · Brushed Brass · Gun Metal

Custom finishes available on request.

HZJ-118 D-Pull & C-Pull (U-Type)

MAIN VIEW



ENGINEERING DIMENSIONS (mm)

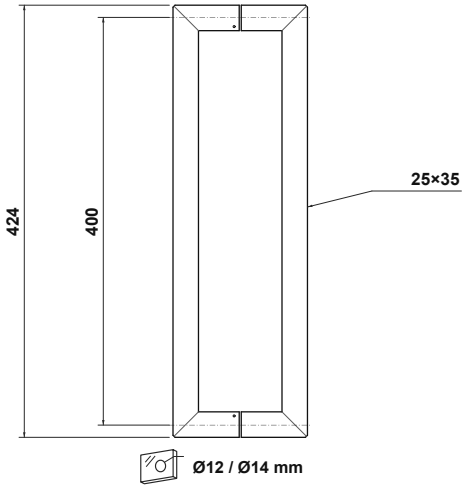

VERIFIED CATALOG SPECIFICATIONS

Material Grade	**SS201 / SS304 / SS316**
Overall Length	**424 mm (16.69")**
Hole Spacing (CTC)	**400 mm (15.75")**
Tube Spec	**25×35 mm (0.98"×1.38")**
Additional Sizes	**Custom lengths, CTC & tube sizes available on request.**
Minimum Order Quantity (MOQ)	**100 Sets (Sample Orders Supported)**

Glass Fit & Drilling

- **8–12 mm tempered glass** (Ø12/14 mm drill holes)
- **Thicker framed or metal doors** (optional extended bolts on request)

Confirm the bore on the approved drawing before tempering.

Available Surface Finishes

- Mirror Polish
- Satin
- Matte Black
- Brushed Brass
- Gun Metal

Custom finishes available on request.

HZJ-119 Ladder Pull (H-Type)

MAIN VIEW



ENGINEERING DIMENSIONS (mm)

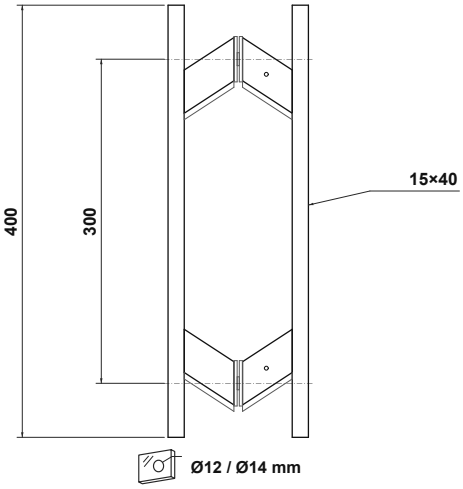

VERIFIED CATALOG SPECIFICATIONS

Material Grade	**SS201 / SS304 / SS316**
Overall Length	**400 mm (15.75")**
Hole Spacing (CTC)	**300 mm (11.81")**
Tube Spec	**15×40 mm (0.59"×1.57")**
Additional Sizes	**Custom lengths, CTC & tube sizes available on request.**
Minimum Order Quantity (MOQ)	**100 Sets (Sample Orders Supported)**

Glass Fit & Drilling

- **8–12 mm tempered glass** (Ø12/14 mm drill holes)
- **Thicker framed or metal doors** (optional extended bolts on request)

Confirm the bore on the approved drawing before tempering.

Available Surface Finishes

- Mirror Polish
- Satin
- Matte Black
- Brushed Brass
- Gun Metal

Custom finishes available on request.

HZJ-120

D-Pull & C-Pull (U-Type)

MAIN VIEW



ENGINEERING DIMENSIONS (mm)

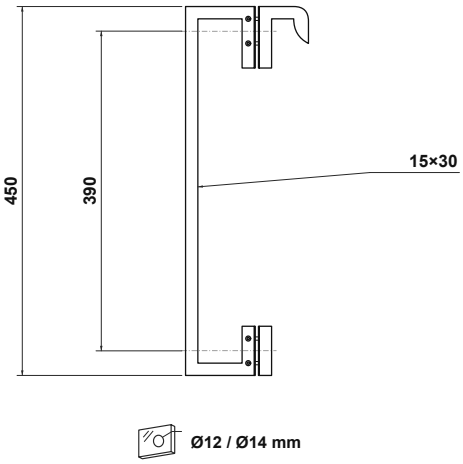

VERIFIED CATALOG SPECIFICATIONS

Material Grade	**SS201 / SS304 / SS316**
Overall Length	**450 mm (17.72")**
Hole Spacing (CTC)	**390 mm (15.35")**
Tube Spec	**15×30 mm (0.59"×1.18")**
Additional Sizes	**Custom lengths, CTC & tube sizes available on request.**
Minimum Order Quantity (MOQ)	**100 Sets (Sample Orders Supported)**

Glass Fit & Drilling

- **8–12 mm tempered glass** (Ø12/14 mm drill holes)
- **Thicker framed or metal doors** (optional extended bolts on request)

Confirm the bore on the approved drawing before tempering.

Available Surface Finishes

- Mirror Polish
- Satin
- Matte Black
- Brushed Brass
- Gun Metal

Custom finishes available on request.

HZJ-121 Shower Towel Bar Combo (L-Type)

MAIN VIEW

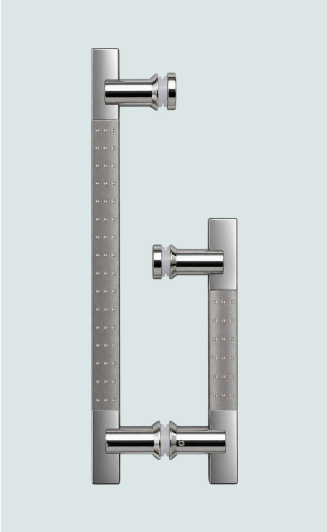

ENGINEERING DIMENSIONS (mm)

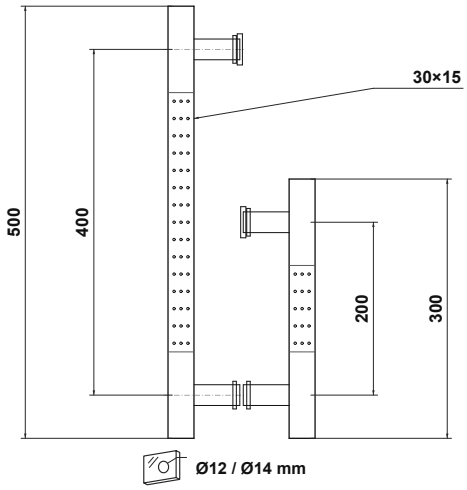

VERIFIED CATALOG SPECIFICATIONS

Material Grade	**SS201 / SS304 / SS316**
Overall Length	**Long: 500 / Short: 300 mm (Long: 19.69" / Short: 11.81")**
Hole Spacing (CTC)	**Long: 400 / Short: 200 mm (Long: 15.75" / Short: 7.87")**
Tube Spec	**30×15 mm (1.18"×0.59")**
Additional Sizes	**Custom lengths, CTC & tube sizes available on request.**
Minimum Order Quantity (MOQ)	**100 Sets (Sample Orders Supported)**

Glass Fit & Drilling

- **8–12 mm tempered glass** (Ø12/14 mm drill holes)
- **Thicker framed or metal doors** (optional extended bolts on request)

Confirm the bore on the approved drawing before tempering.

Available Surface Finishes

Mirror Polish · Satin · Matte Black · Brushed Brass · Gun Metal

Custom finishes available on request.

HZJ-122 Ladder Pull (H-Type)

MAIN VIEW

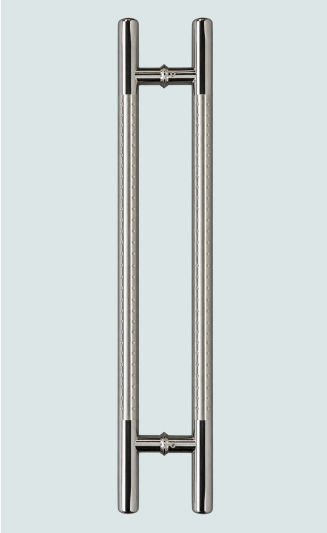

ENGINEERING DIMENSIONS (mm)

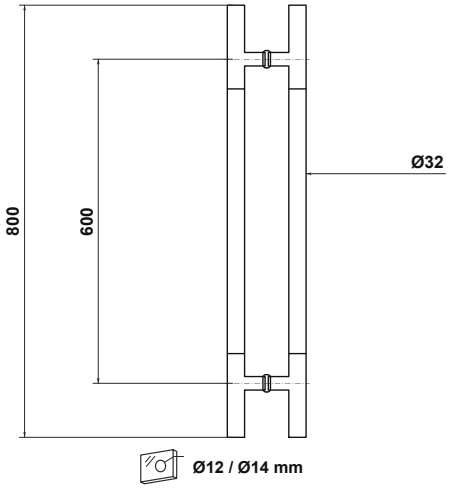

VERIFIED CATALOG SPECIFICATIONS

Material Grade	**SS201 / SS304 / SS316**
Overall Length	**800 mm (31.50")**
Hole Spacing (CTC)	**600 mm (23.62")**
Tube Spec	**Ø32 mm (1.26")**
Additional Sizes	**Custom lengths, CTC & tube sizes available on request.**
Minimum Order Quantity (MOQ)	**100 Sets (Sample Orders Supported)**

Glass Fit & Drilling

- **8–12 mm tempered glass** (Ø12/14 mm drill holes)
- **Thicker framed or metal doors** (optional extended bolts on request)

Confirm the bore on the approved drawing before tempering.

Available Surface Finishes

Mirror Polish · Satin · Matte Black · Brushed Brass · Gun Metal

Custom finishes available on request.

HZJ-123 Ladder Pull (H-Type)

MAIN VIEW



ENGINEERING DIMENSIONS (mm)

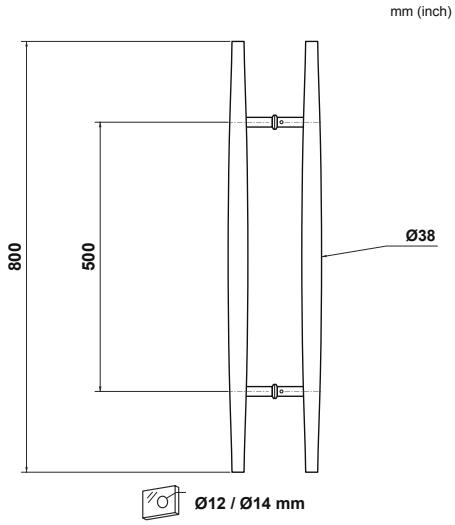

VERIFIED CATALOG SPECIFICATIONS

Material Grade	**SS201 / SS304 / SS316**
Overall Length	**800 mm (31.50")**
Hole Spacing (CTC)	**500 mm (19.69")**
Tube Spec	**Ø38 mm (Ø1.50")**
Additional Sizes	**Custom lengths, CTC & tube sizes available on request.**
Minimum Order Quantity (MOQ)	**100 Sets (Sample Orders Supported)**

Glass Fit & Drilling

- **8–12 mm tempered glass** (Ø12/14 mm drill holes)
- **Thicker framed or metal doors** (optional extended bolts on request)

Confirm the bore on the approved drawing before tempering.

Available Surface Finishes

- Mirror Polish
- Satin
- Matte Black
- Brushed Brass
- Gun Metal

Custom finishes available on request.

HZJ-124 Shower Towel Bar Combo (L-Type)

MAIN VIEW · Brushed Rose Gold

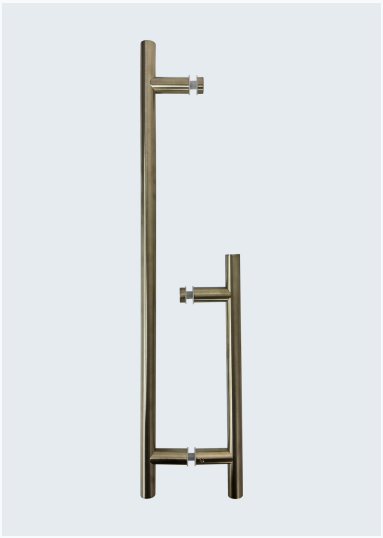

ENGINEERING DIMENSIONS (mm)

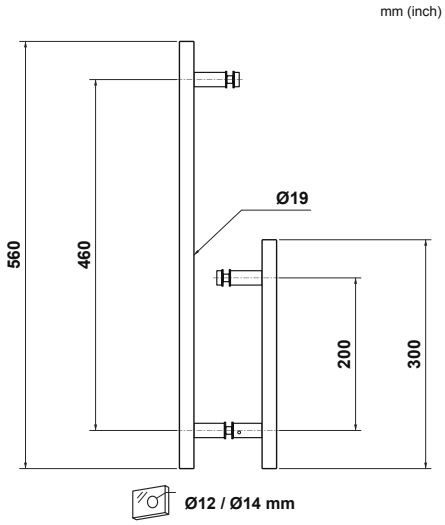

VERIFIED CATALOG SPECIFICATIONS

Material Grade	SS201 / SS304 / SS316
Overall Length	Long: 560 / Short: 300 mm (Long: 22.05" / Short: 11.81")
Hole Spacing (CTC)	Long: 460 / Short: 200 mm (Long: 18.11" / Short: 7.87")
Tube Spec	Ø19 mm (Ø0.75")
Additional Sizes	Custom lengths, CTC & tube sizes available on request.
Minimum Order Quantity (MOQ)	100 Sets (Sample Orders Supported)

Glass Fit & Drilling

- **8–12 mm tempered glass** (Ø12/14 mm drill holes)
- **Thicker framed or metal doors** (optional extended bolts on request)

Confirm the bore on the approved drawing before tempering.

Available Surface Finishes

Mirror Polish · Satin · Matte Black · Brushed Brass · Gun Metal

Custom finishes available on request.

HZJ-125 Shower Towel Bar Combo (L-Type)

MAIN VIEW · Mirror Polish

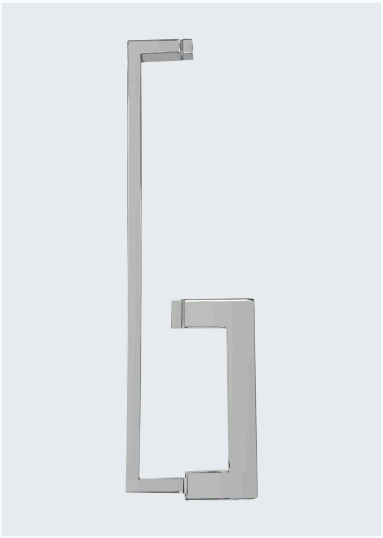

ENGINEERING DIMENSIONS (mm)

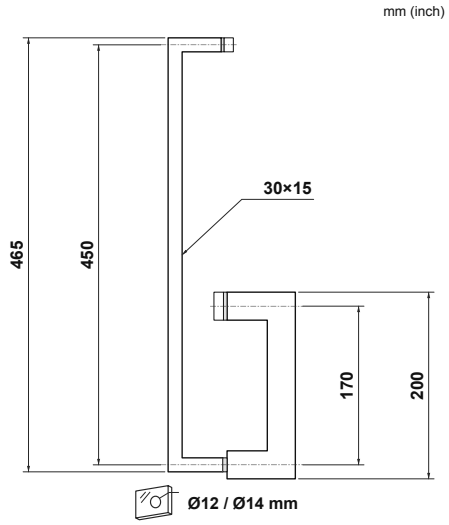

VERIFIED CATALOG SPECIFICATIONS

Material Grade	SS201 / SS304 / SS316
Overall Length	Long: 465 / Short: 200 mm (Long: 18.31" / Short: 7.87")
Hole Spacing (CTC)	Long: 450 / Short: 170 mm (Long: 17.72" / Short: 6.69")
Tube Spec	30×15 mm (1.18"×0.59")
Additional Sizes	Custom lengths, CTC & tube sizes available on request.
Minimum Order Quantity (MOQ)	100 Sets (Sample Orders Supported)

Glass Fit & Drilling

- **8–12 mm tempered glass** (Ø12/14 mm drill holes)
- **Thicker framed or metal doors** (optional extended bolts on request)

Confirm the bore on the approved drawing before tempering.

Available Surface Finishes

Mirror Polish · Satin · Matte Black · Brushed Brass · Gun Metal

Custom finishes available on request.

HZJ-126 Shower Towel Bar Combo (L-Type)

MAIN VIEW · Mirror Polish

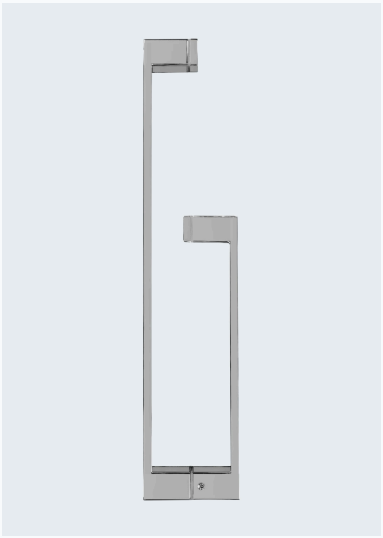

ENGINEERING DIMENSIONS (mm)

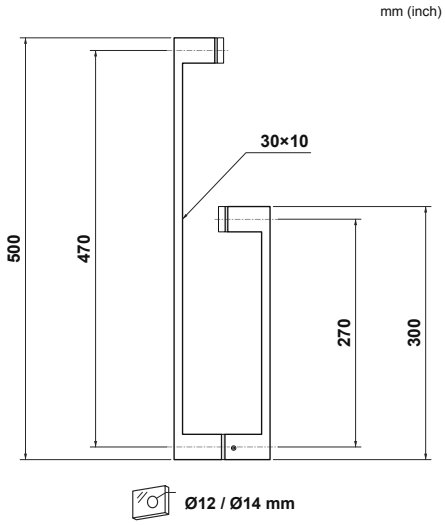

VERIFIED CATALOG SPECIFICATIONS

Material Grade	**SS201 / SS304 / SS316**
Overall Length	**Long: 500 / Short: 300 mm (Long: 19.69" / Short: 11.81")**
Hole Spacing (CTC)	**Long: 470 / Short: 270 mm (Long: 18.50" / Short: 10.63")**
Tube Spec	**30×10 mm (1.18"×0.39")**
Additional Sizes	**Custom lengths, CTC & tube sizes available on request.**
Minimum Order Quantity (MOQ)	**100 Sets (Sample Orders Supported)**

Glass Fit & Drilling

- **8–12 mm tempered glass** (Ø12/14 mm drill holes)
- **Thicker framed or metal doors** (optional extended bolts on request)

Confirm the bore on the approved drawing before tempering.

Available Surface Finishes

Mirror Polish · Satin · Matte Black · Brushed Brass · Gun Metal

Custom finishes available on request.

HZJ-127 Shower Towel Bar Combo (L-Type)

MAIN VIEW · Mirror Polish



ENGINEERING DIMENSIONS (mm)

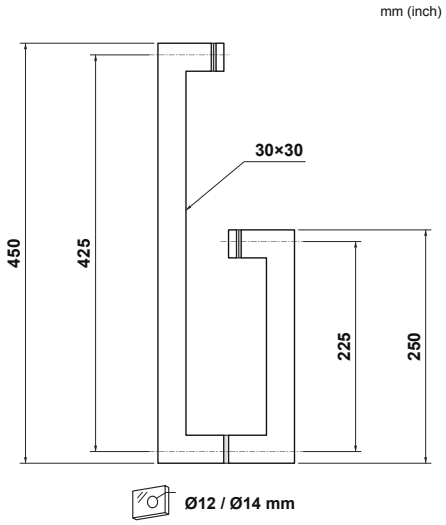

VERIFIED CATALOG SPECIFICATIONS

Material Grade	SS201 / SS304 / SS316
Overall Length	Long: 450 / Short: 250 mm (Long: 17.72" / Short: 9.84")
Hole Spacing (CTC)	Long: 425 / Short: 225 mm (Long: 16.73" / Short: 8.86")
Tube Spec	30×30 mm (1.18"×1.18")
Additional Sizes	Custom lengths, CTC & tube sizes available on request.
Minimum Order Quantity (MOQ)	100 Sets (Sample Orders Supported)

Glass Fit & Drilling

- **8–12 mm tempered glass** (Ø12/14 mm drill holes)
- **Thicker framed or metal doors** (optional extended bolts on request)

Confirm the bore on the approved drawing before tempering.

Available Surface Finishes

Mirror Polish · Satin · Matte Black · Brushed Brass · Gun Metal

Custom finishes available on request.

HOZKING

QUALITY & DELIVERY

Committed to Your Project

Reliable scheduling, piece-by-piece quality control, and practical customization built around your order requirements.

Reliable Lead Times

On-Schedule Delivery

Standardized production scheduling with confirmed sample and bulk milestones, proactive progress updates, and dependable support for your project timelines.

Consistent Quality

Piece-by-Piece Inspection

Every handle is checked for dimensional accuracy, structural integrity, and finish consistency before shipment, packed in scratch-protective export packaging.

Focused on Your Needs

Practical Project Support

Dedicated one-on-one support for special door thicknesses, custom CTC spacing, bespoke finishes, and project hardware selection—solving issues before production.

HOW WE SUPPORT YOUR ORDER

01

Requirement Review

Confirm door specs, stainless grades (SS201 / SS304 / SS316), and finish targets.

02

Sampling & OEM/ODM

Verify custom lengths, CTC spacing, tube specs, and bespoke finishes via samples.

03

Production & Full QC

Controlled scheduling with progress updates and 100% piece-by-piece inspection.

04

Safe Packing & Delivery

Scratch-protective individual packing and reinforced cartons shipped on schedule.

Contact HOZKING

ZHAOQING HAOZHIJIE METAL PRODUCTS CO., LTD.

No. 24 Jinlang Road, Xiaolang Industrial Zone, Jinli Town, Gaoyao District, Zhaoqing, Guangdong, China

WEBSITE
www.hozking.com

EMAIL
bosco@hozking.com

WHATSAPP
+86 13229007430

WECHAT
+86 13229007430

Share your drawings or project requirements — we'll handle the rest.